Rod end SAA40 TXE-2LS SKF

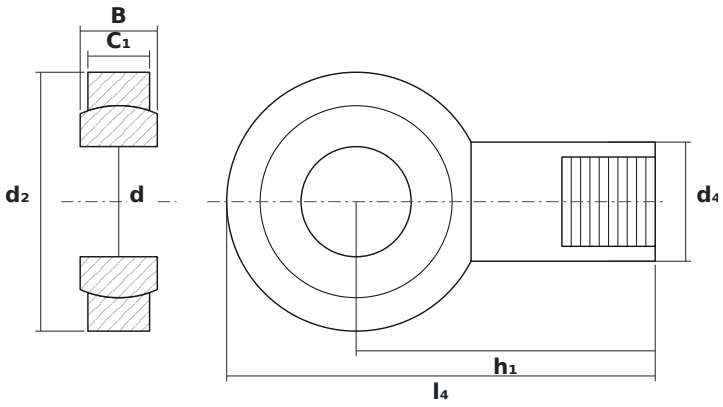

DIMENSIONS

d	bore diameter	**40 mm**
d2	rod end head diameter	**94 mm**
B	ball (inner ring) width	**28 mm**

SPECIFICATIONS

Manufacturer	**SKF**
Manufacturer designation	**SAA40 TXE-2LS**
Rolling elements	**plain bearing (no rolling elements)**