Deep groove ball bearing 6403 C3 NSK

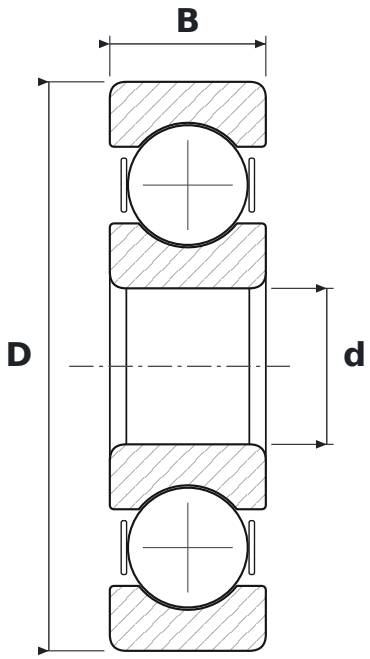

DIMENSIONS

d	bore diameter	**17 mm**
D	outside diameter	**62 mm**
B	width	**17 mm**

WHAT 6403 C3 MEANS

64	łożysko kulkowe zwykłe (6), seria średnic 4 – ciężka
C3	radial clearance greater than normal

SPECIFICATIONS

Manufacturer	**NSK**
Manufacturer designation	**6403 C3**
Rolling elements	**single-row ball bearing**