# Deep groove ball bearing 6004-Z NSK

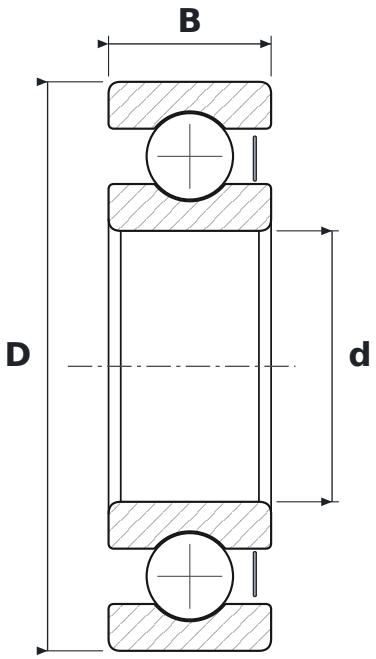


## DIMENSIONS

| | | |
|---|---|---|
| **d** | bore diameter | **20 mm** |
| **D** | outside diameter | **42 mm** |
| **B** | width | **12 mm** |

## WHAT 6004-Z MEANS

| | |
|---|---|
| **60** | łożysko kulkowe zwykłe (6), seria średnic 0 – bardzo lekka |
| **Z** | steel shield, one side |

## SPECIFICATIONS

| | |
|---|---|
| Manufacturer | **NSK** |
| Manufacturer designation | **6004-Z** |
| Rolling elements | **single-row ball bearing** |