CASTOMER

DATASHEET

Cylindrical roller bearing NU230 WC3 NSK

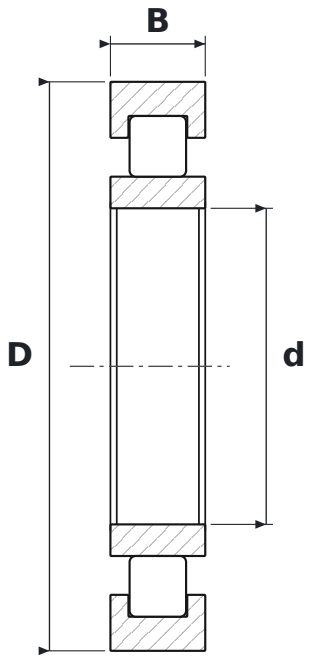

DIMENSIONS

d	bore diameter	**150 mm**
D	outside diameter	**270 mm**
B	width	**45 mm**

WHAT NU230 WC3 MEANS

W	koszyk stalowy tłoczony
C3	radial clearance greater than normal

SPECIFICATIONS

Manufacturer	**NSK**
Manufacturer designation	**NU230 WC3**
Rolling elements	**single-row cylindrical roller bearing**