Deep groove ball bearing 695 DD12MC3E NSK

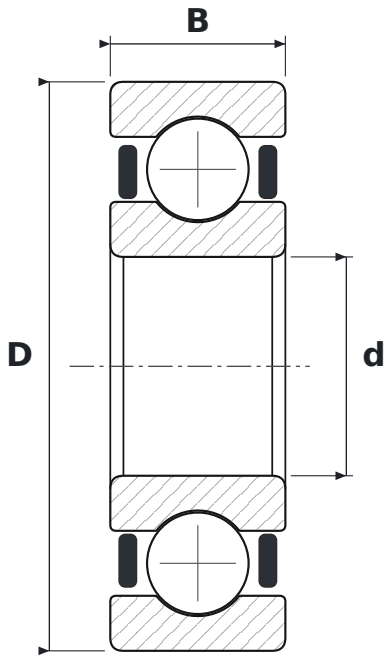

DIMENSIONS

d	bore diameter	**5 mm**
D	outside diameter	**13 mm**
B	width	**4 mm**

SPECIFICATIONS

Manufacturer	**NSK**
Manufacturer designation	**695 DD12MC3E (2RS)**
Rolling elements	**single-row ball bearing**
C3	**radial clearance greater than normal**
E	**reinforced design, higher load rating**
2RS	**contact rubber seals, both sides**