CASTOMER

DATASHEET

Cylindrical roller bearing N315 WC3 NSK

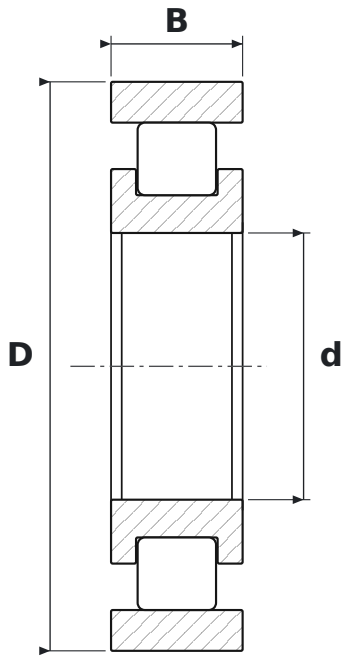

DIMENSIONS

d	bore diameter	**75 mm**
D	outside diameter	**160 mm**
B	width	**37 mm**

WHAT N315 WC3 MEANS

W	koszyk stalowy tłoczony
C3	radial clearance greater than normal

SPECIFICATIONS

Manufacturer	**NSK**
Manufacturer designation	**N315 WC3**
Rolling elements	**single-row cylindrical roller bearing**