# Cylindrical roller bearing NUP206 ET NSK

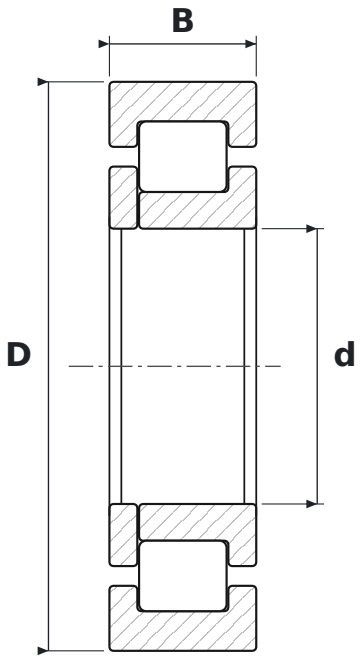


## DIMENSIONS

| | | |
|---|---|---|
| **d** | bore diameter | **30 mm** |
| **D** | outside diameter | **62 mm** |
| **B** | width | **16 mm** |

## WHAT NUP206 ET MEANS

| | |
|---|---|
| **E** | reinforced design, higher load rating |
| **T** | koszyk z poliamidu 66 wzmocnionego włóknem szklanym |

## SPECIFICATIONS

| | |
|---|---|
| Manufacturer | **NSK** |
| Manufacturer designation | **NUP206 ET** |
| Rolling elements | **single-row cylindrical roller bearing** |