Cylindrical roller bearing NU2215 ET NSK

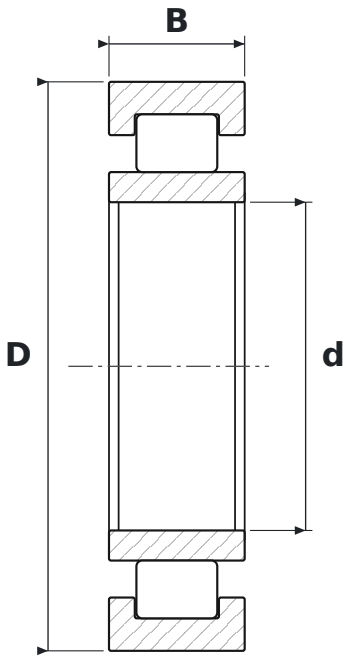

DIMENSIONS

d	bore diameter	**75 mm**
D	outside diameter	**130 mm**
B	width	**31 mm**

WHAT NU2215 ET MEANS

E	reinforced design, higher load rating
T	koszyk z poliamidu 66 wzmocnionego włóknem szklanym

SPECIFICATIONS

Manufacturer	**NSK**
Manufacturer designation	**NU2215 ET**
Rolling elements	**single-row cylindrical roller bearing**