Deep groove ball bearing 6904 VV NSK

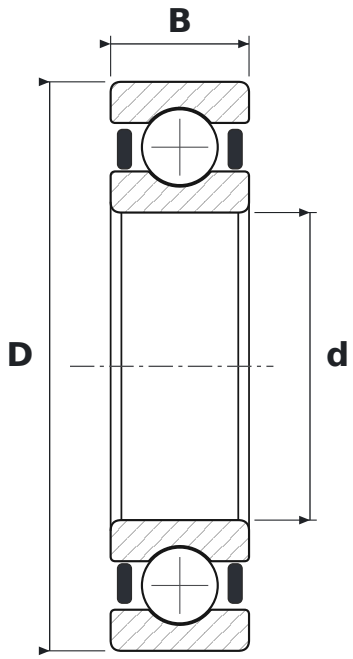

DIMENSIONS

d	bore diameter	**20 mm**
D	outside diameter	**37 mm**
B	width	**9 mm**

SPECIFICATIONS

Manufacturer	**NSK**
Manufacturer designation	**6904 VV**
Rolling elements	**single-row ball bearing**
2RZ	**non-contact rubber seals, both sides**
Radial internal clearance	**CN – normal**