Deep groove ball bearing 6905 ZZ NSK

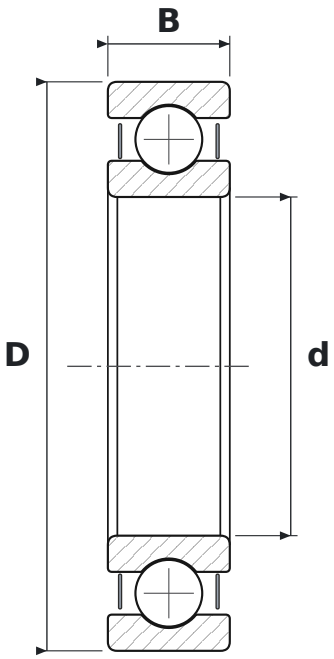

DIMENSIONS

d	bore diameter	**25 mm**
D	outside diameter	**42 mm**
B	width	**9 mm**

SPECIFICATIONS

Manufacturer	**NSK**
Manufacturer designation	**6905 ZZ**
Rolling elements	**single-row ball bearing**
2Z	**steel shields, both sides**
Radial internal clearance	**CN – normal**