# Cylindrical roller bearing NU234 EM NSK

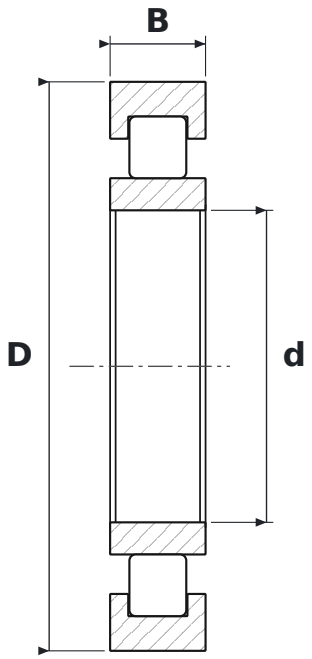


## DIMENSIONS

| | | |
|---|---|---|
| **d** | bore diameter | **170 mm** |
| **D** | outside diameter | **310 mm** |
| **B** | width | **52 mm** |

## SPECIFICATIONS

| | |
|---|---|
| Manufacturer | **NSK** |
| Manufacturer designation | **NU234 EM** |
| Rolling elements | **single-row cylindrical roller bearing** |
| EM | **machined brass cage (NSK)** |
| Seal | **open – no seals** |
| Radial internal clearance | **CN – normal** |