Cylindrical roller bearing NU204 WC3 NSK

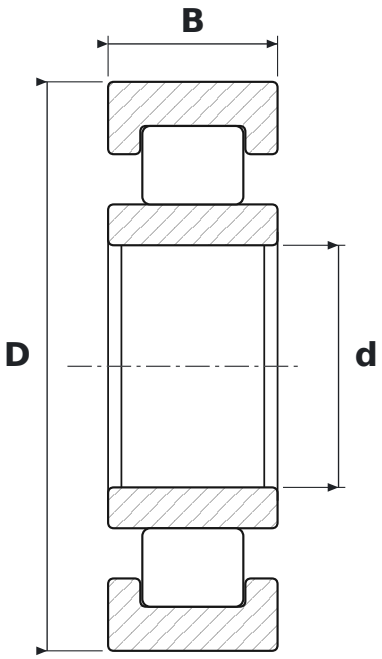

DIMENSIONS

d	bore diameter	**20 mm**
D	outside diameter	**47 mm**
B	width	**14 mm**

WHAT NU204 WC3 MEANS

W	koszyk stalowy tłoczony
C3	radial clearance greater than normal

SPECIFICATIONS

Manufacturer	**NSK**
Manufacturer designation	**NU204 WC3**
Rolling elements	**single-row cylindrical roller bearing**