Cylindrical roller bearing NU2208 WC3 NSK

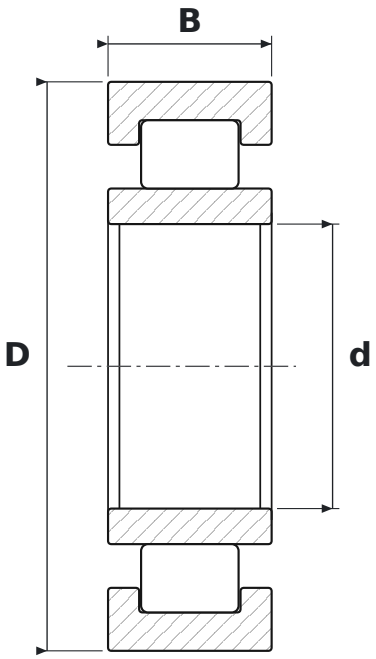

DIMENSIONS

d	bore diameter	**40 mm**
D	outside diameter	**80 mm**
B	width	**23 mm**

WHAT NU2208 WC3 MEANS

W	koszyk stalowy tłoczony
C3	radial clearance greater than normal

SPECIFICATIONS

Manufacturer	**NSK**
Manufacturer designation	**NU2208 WC3**
Rolling elements	**single-row cylindrical roller bearing**