Cylindrical roller bearing NU232 EM NSK

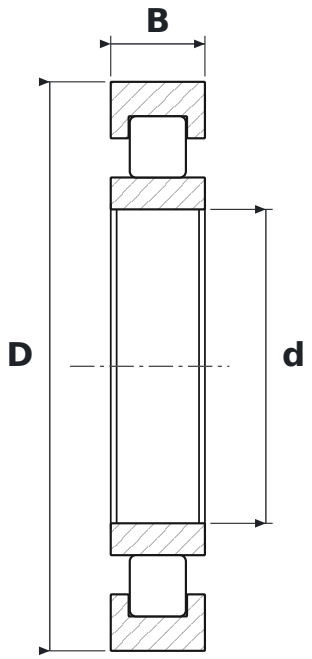

DIMENSIONS

d	bore diameter	**160 mm**
D	outside diameter	**290 mm**
B	width	**48 mm**

SPECIFICATIONS

Manufacturer	**NSK**
Manufacturer designation	**NU232 EM**
Rolling elements	**single-row cylindrical roller bearing**
EM	**machined brass cage (NSK)**
Seal	**open – no seals**
Radial internal clearance	**CN – normal**