Cylindrical roller bearing NJ232 EMC3 NSK

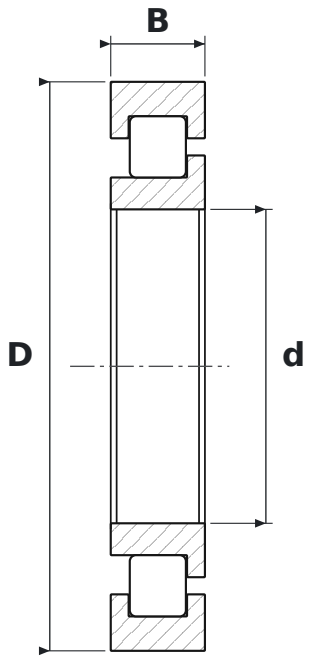

DIMENSIONS

d	bore diameter	**160 mm**
D	outside diameter	**290 mm**
B	width	**48 mm**

WHAT NJ232 EMC3 MEANS

EM	machined brass cage (NSK)
C3	radial clearance greater than normal

SPECIFICATIONS

Manufacturer	**NSK**
Manufacturer designation	**NJ232 EMC3**
Rolling elements	**single-row cylindrical roller bearing**