Spherical plain bearing GE20-DO-E INA

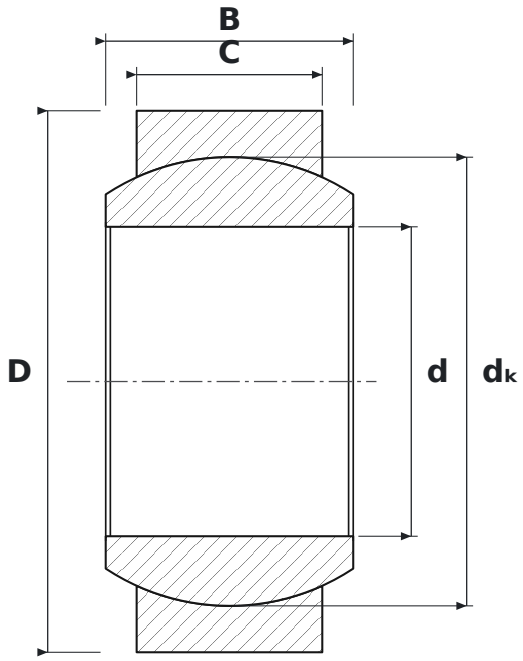

DIMENSIONS

d	bore diameter	**20 mm**
D	outside diameter	**35 mm**
B	inner ring (ball) width	**16 mm**
C	outer ring width	**12 mm**
dK	ball diameter	**29 mm**

SPECIFICATIONS

Manufacturer	**INA**
Manufacturer designation	**GE20-DO-E**
B – inner ring width	**16 mm**
C – outer ring width	**12 mm**
Rolling elements	**plain bearing (no rolling elements)**