Spherical plain bearing GE60-DO-2RS-E INA

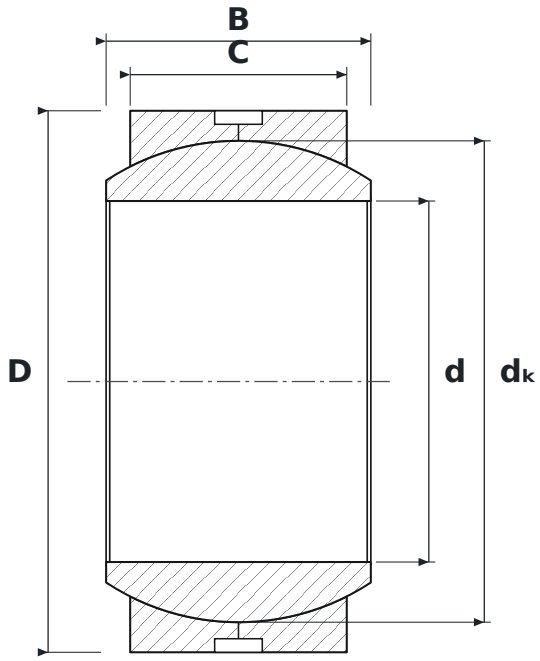

DIMENSIONS

d	bore diameter	**60 mm**
D	outside diameter	**90 mm**
B	inner ring (ball) width	**44 mm**
C	outer ring width	**36 mm**
dK	ball diameter	**80 mm**

SPECIFICATIONS

Manufacturer	**INA**
Manufacturer designation	**GE60-DO-2RS-E**
B – inner ring width	**44 mm**
C – outer ring width	**36 mm**
Rolling elements	**plain bearing (no rolling elements)**
Features	**Lubrication groove and holes**