Rod end BEF12-21-502 CLASSIC DURBAL

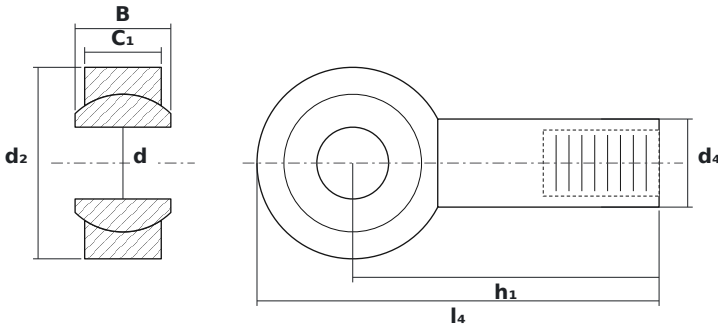

DIMENSIONS

d	bore diameter	**12 mm**
d2	rod end head diameter	**32 mm**
B	ball (inner ring) width	**16 mm**

SPECIFICATIONS

Manufacturer	**DURBAL**
Manufacturer designation	**BEF12-21-502 CLASSIC**
Rolling elements	**plain bearing (no rolling elements)**