Rod end BEM18-20-501 INNE

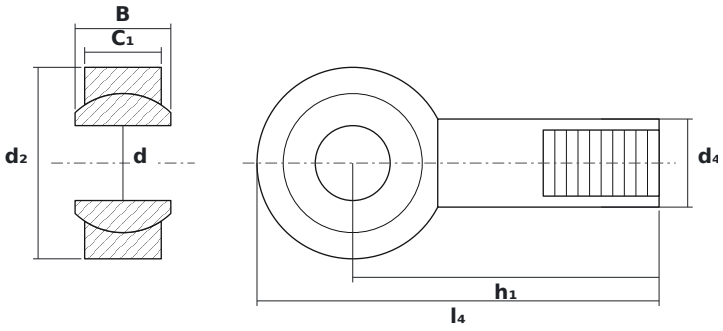

DIMENSIONS

d	bore diameter	**18 mm**
d2	rod end head diameter	**46 mm**
B	ball (inner ring) width	**23 mm**

SPECIFICATIONS

Manufacturer	**INNE**
Manufacturer designation	**BEM18-20-501**
Rolling elements	**plain bearing (no rolling elements)**
Mass	**0.25 kg**