Rod end BEMN14-20-502 INNE

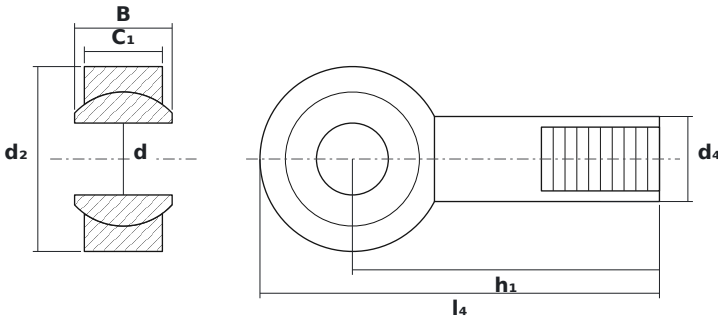

DIMENSIONS

d	bore diameter	**14 mm**
d2	rod end head diameter	**36 mm**
B	ball (inner ring) width	**19 mm**

SPECIFICATIONS

Manufacturer	**INNE**
Manufacturer designation	**BEMN14-20-502**
Rolling elements	**plain bearing (no rolling elements)**
Mass	**0.127 kg**