Rod end BEMN20-20-501 INNE

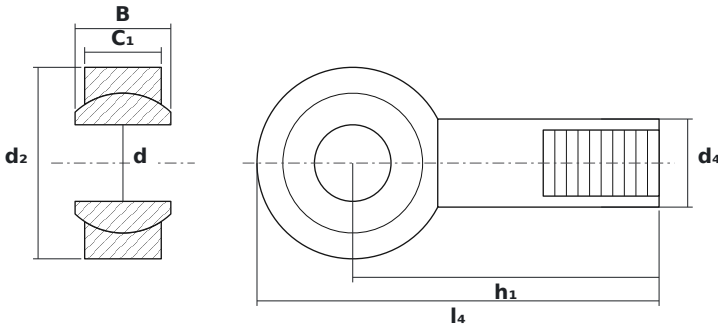

DIMENSIONS

d	bore diameter	**20 mm**
d2	rod end head diameter	**50 mm**
B	ball (inner ring) width	**25 mm**

SPECIFICATIONS

Manufacturer	**INNE**
Manufacturer designation	**BEMN20-20-501**
Rolling elements	**plain bearing (no rolling elements)**
Mass	**0.327 kg**