Rod end BRF20-00-501 PREMIUM DURBAL

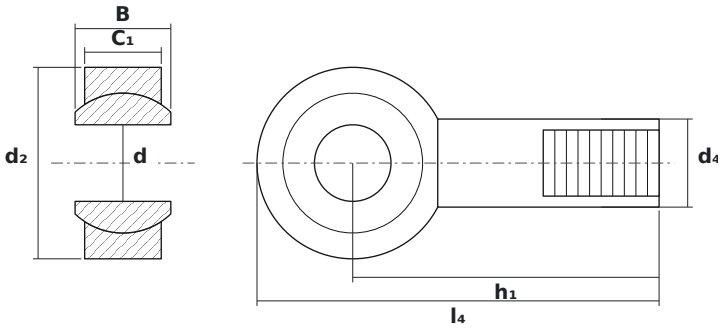

DIMENSIONS

d	bore diameter	**20 mm**
d2	rod end head diameter	**50 mm**
B	ball (inner ring) width	**25 mm**

SPECIFICATIONS

Manufacturer	**DURBAL**
Manufacturer designation	**BRF20-00-501 PREMIUM**
Rolling elements	**plain bearing (no rolling elements)**