Rod end BRM18-00-502 PREMIUM DURBAL

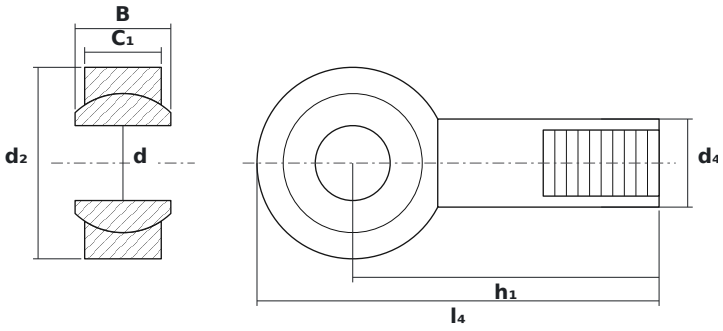

DIMENSIONS

d	bore diameter	**18 mm**
d2	rod end head diameter	**46 mm**
B	ball (inner ring) width	**23 mm**

SPECIFICATIONS

Manufacturer	**DURBAL**
Manufacturer designation	**BRM18-00-502 PREMIUM**
Rolling elements	**plain bearing (no rolling elements)**