# Rod end BRM20-00-501 PREMIUM DURBAL

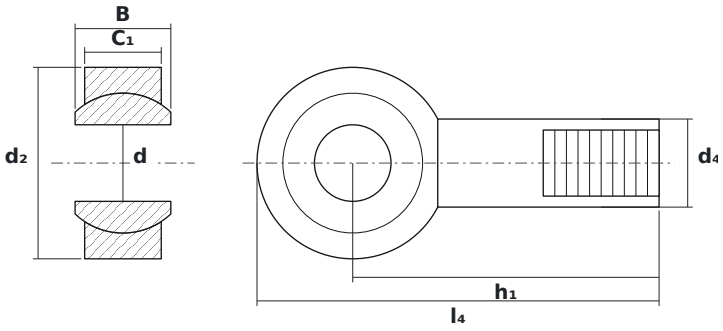


## DIMENSIONS

| | | |
|---|---|---|
| **d** | bore diameter | **20 mm** |
| **d2** | rod end head diameter | **50 mm** |
| **B** | ball (inner ring) width | **25 mm** |

## SPECIFICATIONS

| | |
|---|---|
| Manufacturer | **DURBAL** |
| Manufacturer designation | **BRM20-00-501 PREMIUM** |
| Rolling elements | **plain bearing (no rolling elements)** |