Rod end BRTF10-00-502 PREMIUM DURBAL

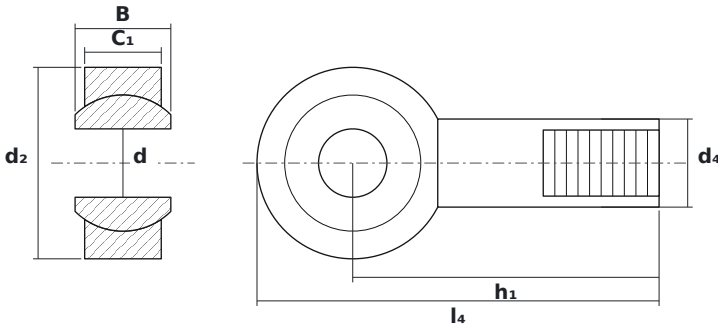

DIMENSIONS

d	bore diameter	**10 mm**
d2	rod end head diameter	**28 mm**
B	ball (inner ring) width	**14 mm**

SPECIFICATIONS

Manufacturer	**DURBAL**
Manufacturer designation	**BRTF10-00-502 PREMIUM**
Rolling elements	**plain bearing (no rolling elements)**