Rod end BRTF25-00-502 PREMIUM DURBAL

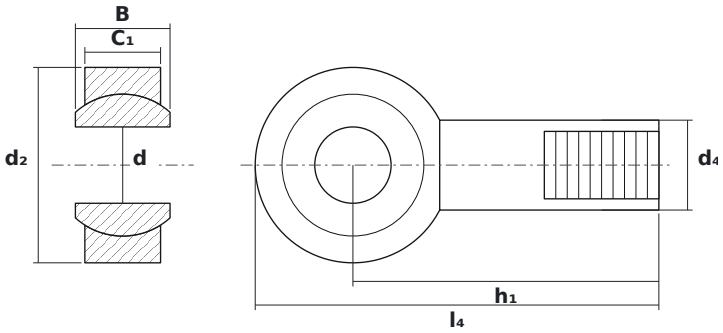

DIMENSIONS

d	bore diameter	**25 mm**
d2	rod end head diameter	**64 mm**
B	ball (inner ring) width	**31 mm**

SPECIFICATIONS

Manufacturer	**DURBAL**
Manufacturer designation	**BRTF25-00-502 PREMIUM**
Rolling elements	**plain bearing (no rolling elements)**