Rod end CF14 M14 TESCUBAL

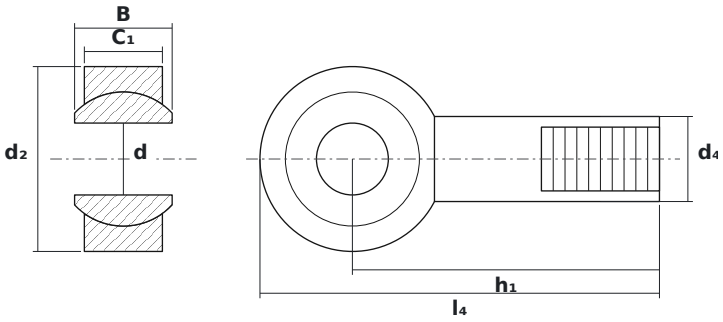

DIMENSIONS

d	bore diameter	**14 mm**
d2	rod end head diameter	**36 mm**
B	ball (inner ring) width	**19 mm**

SPECIFICATIONS

Manufacturer	**TESCUBAL**
Manufacturer designation	**CF14 M14**
Rolling elements	**plain bearing (no rolling elements)**