Rod end CFL25 M24X2 TESCUBAL

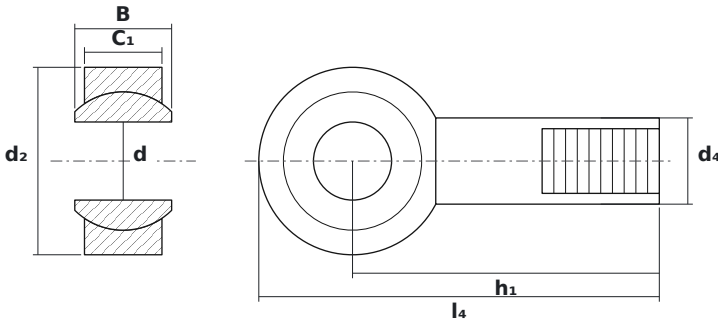

DIMENSIONS

d	bore diameter	**25 mm**
d2	rod end head diameter	**60 mm**
B	ball (inner ring) width	**31 mm**

SPECIFICATIONS

Manufacturer	**TESCUBAL**
Manufacturer designation	**CFL25 M24X2**
Rolling elements	**plain bearing (no rolling elements)**