Rod end CFXL8 M8 TESCUBAL

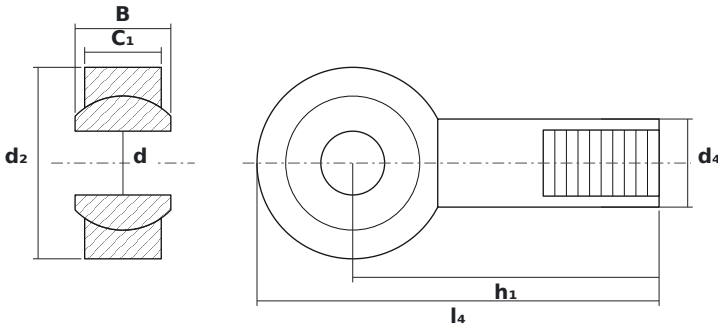

DIMENSIONS

d	bore diameter	**8 mm**
d2	rod end head diameter	**24 mm**
B	ball (inner ring) width	**12 mm**

SPECIFICATIONS

Manufacturer	**TESCUBAL**
Manufacturer designation	**CFXL8 M8**
Rolling elements	**plain bearing (no rolling elements)**