Rod end CM16 OK-M16 TESCUBAL

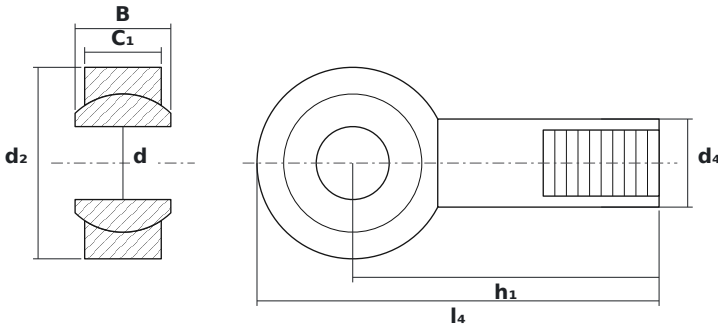

DIMENSIONS

d	bore diameter	**16 mm**
d2	rod end head diameter	**42 mm**
B	ball (inner ring) width	**21 mm**

SPECIFICATIONS

Manufacturer	**TESCUBAL**
Manufacturer designation	**CM16 OK-M16**
Rolling elements	**plain bearing (no rolling elements)**