Rod end CM5 M5 TESCUBAL

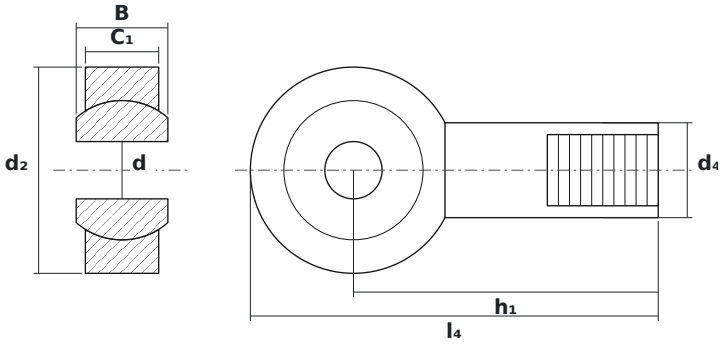

DIMENSIONS

d	bore diameter	**5 mm**
d2	rod end head diameter	**18 mm**
B	ball (inner ring) width	**8 mm**

SPECIFICATIONS

Manufacturer	**TESCUBAL**
Manufacturer designation	**CM5 M5**
Rolling elements	**plain bearing (no rolling elements)**