Rod end CML10 M10 TESCUBAL

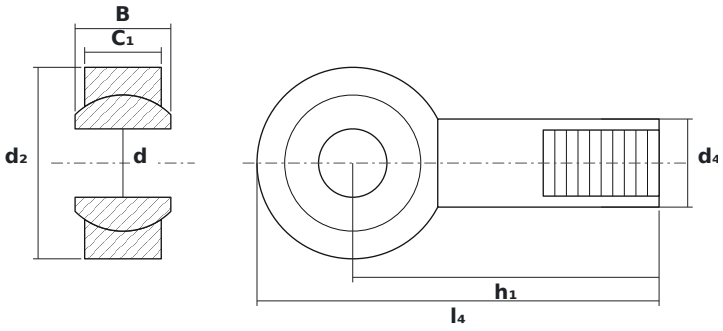

DIMENSIONS

d	bore diameter	**10 mm**
d2	rod end head diameter	**28 mm**
B	ball (inner ring) width	**14 mm**

SPECIFICATIONS

Manufacturer	**TESCUBAL**
Manufacturer designation	**CML10 M10**
Rolling elements	**plain bearing (no rolling elements)**