Rod end CMX6 M6 TESCUBAL

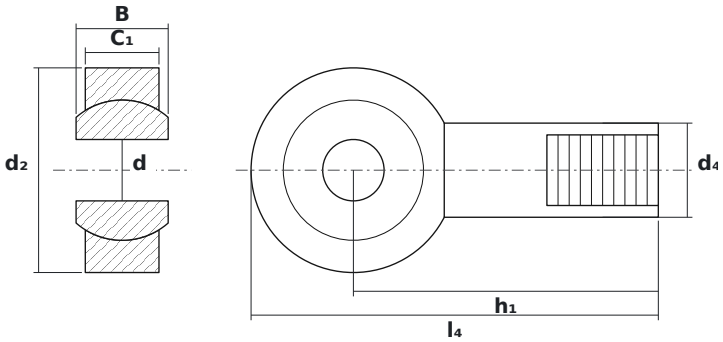

DIMENSIONS

d	bore diameter	**6 mm**
d2	rod end head diameter	**20 mm**
B	ball (inner ring) width	**9 mm**

SPECIFICATIONS

Manufacturer	**TESCUBAL**
Manufacturer designation	**CMX6 M6**
Rolling elements	**plain bearing (no rolling elements)**