Spherical plain bearing DG14 PW Basic Line DURBAL

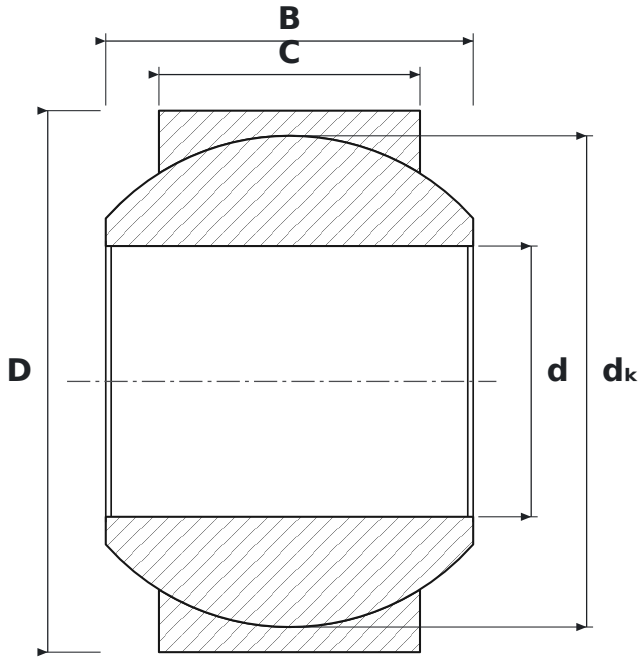

DIMENSIONS

d	bore diameter	**14 mm**
D	outside diameter	**28 mm**
B	inner ring (ball) width	**19 mm**
C	outer ring width	**13.5 mm**
dK	ball diameter	**25.4 mm**

SPECIFICATIONS

Manufacturer	**DURBAL**
Manufacturer designation	**DG14 PW Basic Line**
C – outer ring width	**13.5 mm**
Rolling elements	**plain bearing (no rolling elements)**