Rod end DGAL25 UK2RS INNE

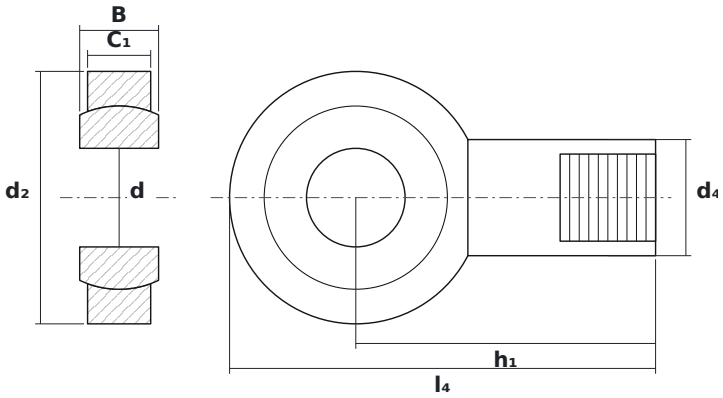

DIMENSIONS

d	bore diameter	**25 mm**
d2	rod end head diameter	**64 mm**
B	ball (inner ring) width	**20 mm**

SPECIFICATIONS

Manufacturer	**INNE**
Manufacturer designation	**DGAL25 UK2RS**
Rolling elements	**plain bearing (no rolling elements)**
Mass	**0.56 kg**