Rod end DGAL40 UK-2RS Basic Line DURBAL

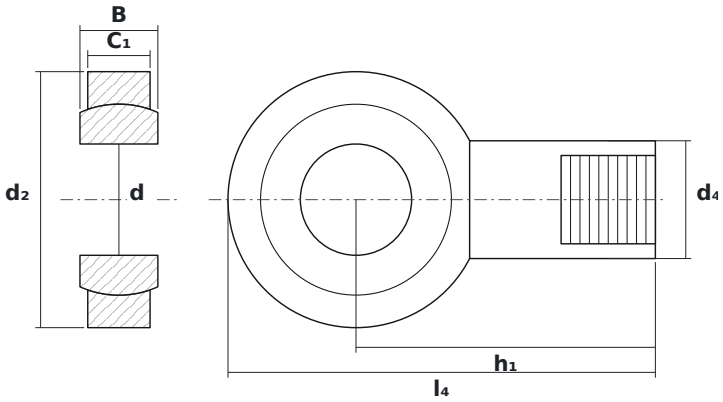

DIMENSIONS

d	bore diameter	**40 mm**
d2	rod end head diameter	**92 mm**
B	ball (inner ring) width	**28 mm**

SPECIFICATIONS

Manufacturer	**DURBAL**
Manufacturer designation	**DGAL40 UK-2RS Basic Line**
Rolling elements	**plain bearing (no rolling elements)**