Spherical plain bearing DGE125 LO Basic Line DURBAL

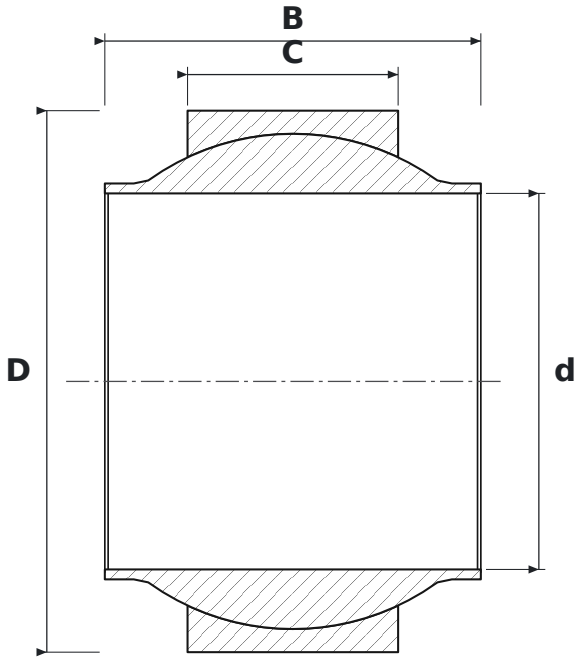

DIMENSIONS

d	bore diameter	**125 mm**
D	outside diameter	**180 mm**
B	inner ring (ball) width	**125 mm**
C	outer ring width	**70 mm**

SPECIFICATIONS

Manufacturer	**DURBAL**
Manufacturer designation	**DGE125 LO Basic Line**
C – outer ring width	**70 mm**
Rolling elements	**plain bearing (no rolling elements)**
B	**40° contact angle**
N	**snap ring groove**
E	**reinforced design, higher load rating**
Seal	**open – no seals**