Spherical plain bearing DGE30 LO DURBAL

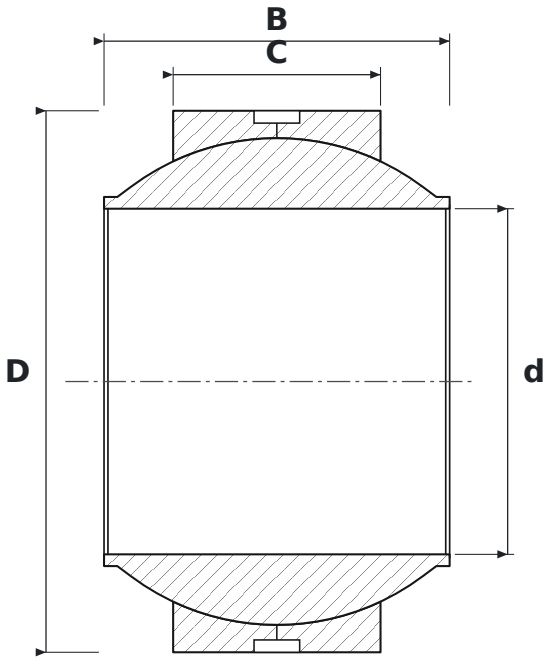

DIMENSIONS

d	bore diameter	**30 mm**
D	outside diameter	**47 mm**
B	inner ring (ball) width	**30 mm**
C	outer ring width	**18 mm**

SPECIFICATIONS

Manufacturer	**DURBAL**
Manufacturer designation	**DGE30 LO**
C – outer ring width	**18 mm**
Rolling elements	**plain bearing (no rolling elements)**
Features	**Lubrication groove and holes**