Spherical plain bearing DGE70 AW DURBAL

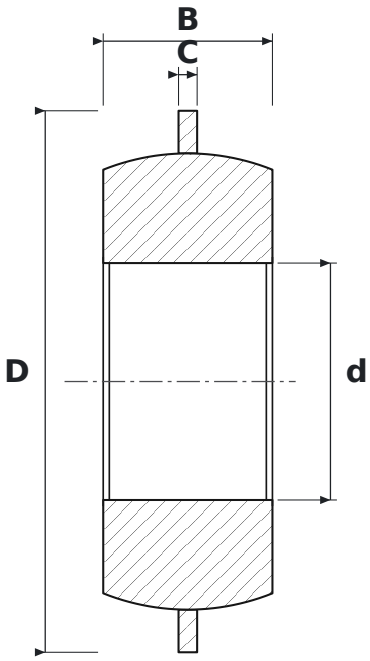

DIMENSIONS

d	bore diameter	**70 mm**
D	outside diameter	**160 mm**
B	inner ring (ball) width	**50 mm**
C	outer ring width	**5.5 mm**

SPECIFICATIONS

Manufacturer	**DURBAL**
Manufacturer designation	**DGE70 AW**
C – outer ring width	**5.5 mm**
Rolling elements	**plain bearing (no rolling elements)**