Spherical plain bearing DGEZ38 ES DURBAL

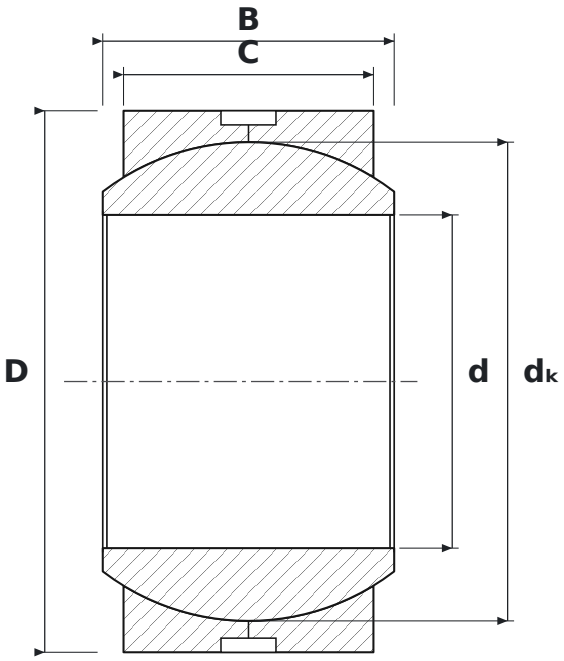

DIMENSIONS

d	bore diameter	**38.1 mm**
D	outside diameter	**61.91 mm**
B	inner ring (ball) width	**33.33 mm**
C	outer ring width	**28.58 mm**
dK	ball diameter	**54.74 mm**

SPECIFICATIONS

Manufacturer	**DURBAL**
Manufacturer designation	**DGEZ38 ES**
C – outer ring width	**28.58 mm**
Rolling elements	**plain bearing (no rolling elements)**
Features	**Lubrication groove and holes**