Rod end DGF70 LO INNE

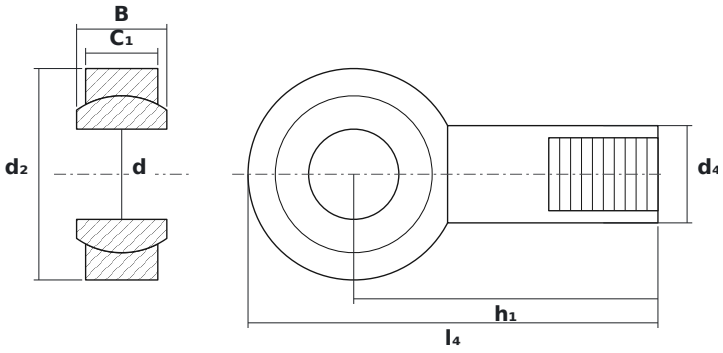

DIMENSIONS

d	bore diameter	**70 mm**
d2	rod end head diameter	**164 mm**
B	ball (inner ring) width	**70 mm**

SPECIFICATIONS

Manufacturer	**INNE**
Manufacturer designation	**DGF70 LO**
Rolling elements	**plain bearing (no rolling elements)**
Mass	**11.25 kg**