Rod end DGIHN-K100 LO INNE

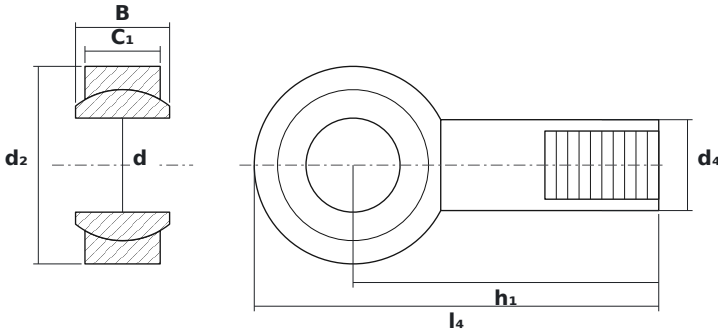

DIMENSIONS

d	bore diameter	**100 mm**
d2	rod end head diameter	**210 mm**
B	ball (inner ring) width	**100 mm**

SPECIFICATIONS

Manufacturer	**INNE**
Manufacturer designation	**DGIHN-K100 LO**
Rolling elements	**plain bearing (no rolling elements)**
Mass	**28 kg**