Rod end DGIHN-K16 LO INNE

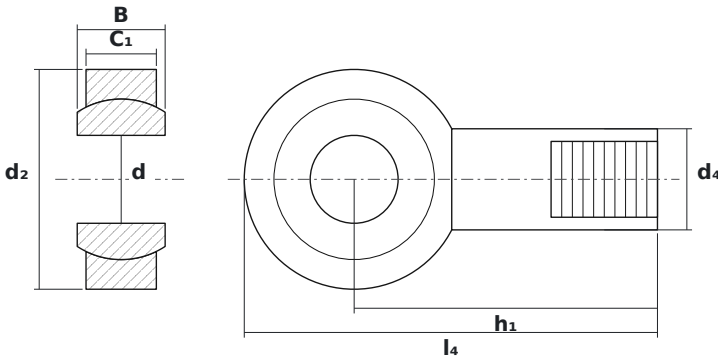

DIMENSIONS

d	bore diameter	**16 mm**
d2	rod end head diameter	**40 mm**
B	ball (inner ring) width	**16 mm**

SPECIFICATIONS

Manufacturer	**INNE**
Manufacturer designation	**DGIHN-K16 LO**
Rolling elements	**plain bearing (no rolling elements)**
Mass	**0.2 kg**