Rod end DGIHN-K32 LO DURBAL

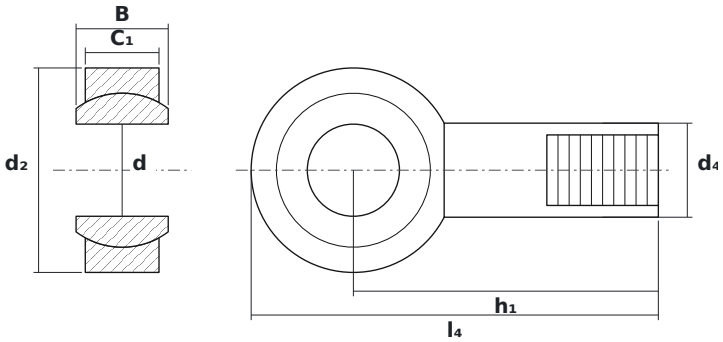

DIMENSIONS

d	bore diameter	**32 mm**
d2	rod end head diameter	**71 mm**
B	ball (inner ring) width	**32 mm**

SPECIFICATIONS

Manufacturer	**DURBAL**
Manufacturer designation	**DGIHN-K32 LO**
Rolling elements	**plain bearing (no rolling elements)**