Rod end DGIHR-K35 DO INNE

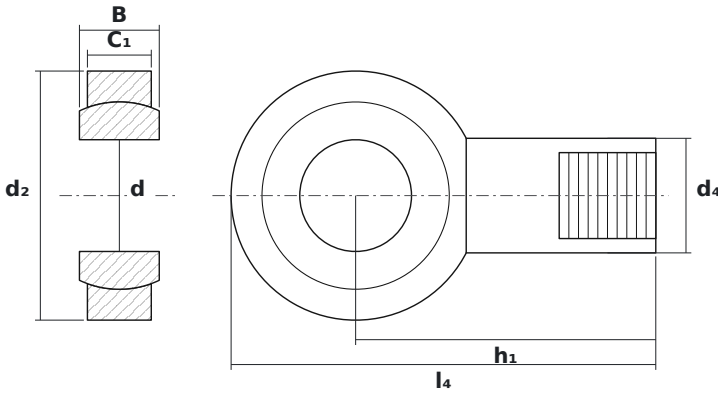

DIMENSIONS

d	bore diameter	**35 mm**
d2	rod end head diameter	**78 mm**
B	ball (inner ring) width	**25 mm**

SPECIFICATIONS

Manufacturer	**INNE**
Manufacturer designation	**DGIHR-K35 DO**
Rolling elements	**plain bearing (no rolling elements)**
Mass	**1.2 kg**