Rod end DGIHR70 DO INNE

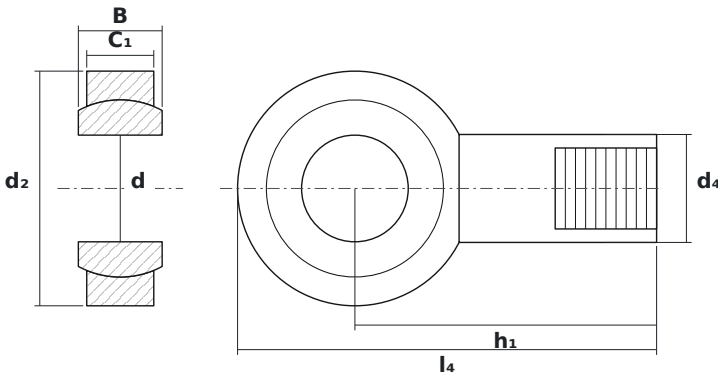

DIMENSIONS

d	bore diameter	**70 mm**
d2	rod end head diameter	**154 mm**
B	ball (inner ring) width	**55 mm**

SPECIFICATIONS

Manufacturer	**INNE**
Manufacturer designation	**DGIHR70 DO**
Rolling elements	**plain bearing (no rolling elements)**
Mass	**8.5 kg**