# Rod end DGIL30 UK INNE

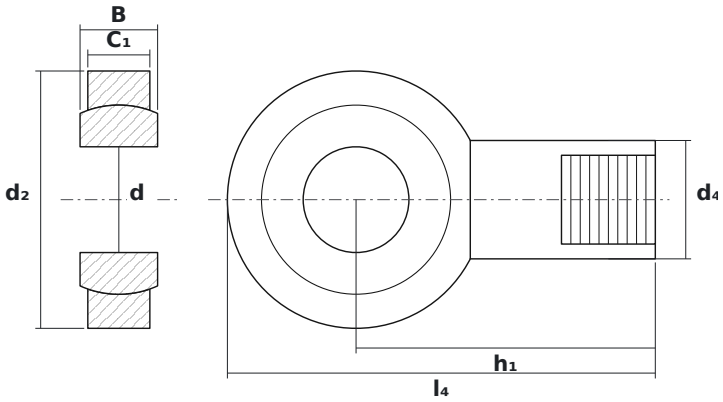


## DIMENSIONS

| | | |
|---|---|---|
| **d** | bore diameter | **30 mm** |
| **d2** | rod end head diameter | **73 mm** |
| **B** | ball (inner ring) width | **22 mm** |

## SPECIFICATIONS

| | |
|---|---|
| Manufacturer | **INNE** |
| Manufacturer designation | **DGIL30 UK** |
| Rolling elements | **plain bearing (no rolling elements)** |
| Mass | **0.93 kg** |