Rod end DGIR50 UK2RS INNE

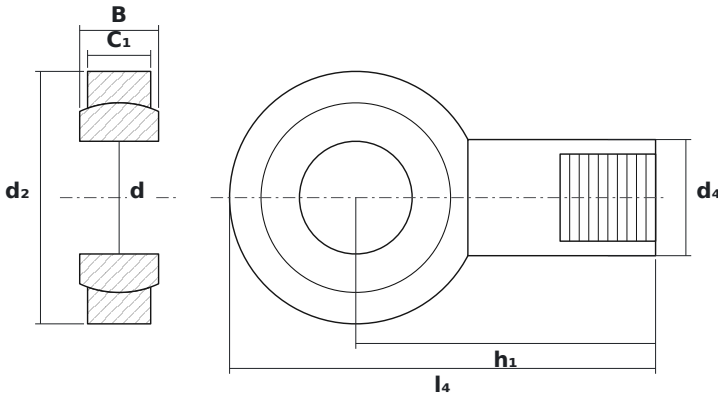

DIMENSIONS

d	bore diameter	**50 mm**
d2	rod end head diameter	**112 mm**
B	ball (inner ring) width	**35 mm**

SPECIFICATIONS

Manufacturer	**INNE**
Manufacturer designation	**DGIR50 UK2RS**
Rolling elements	**plain bearing (no rolling elements)**
Mass	**3.5 kg**