Rod end DGK12 DO INNE

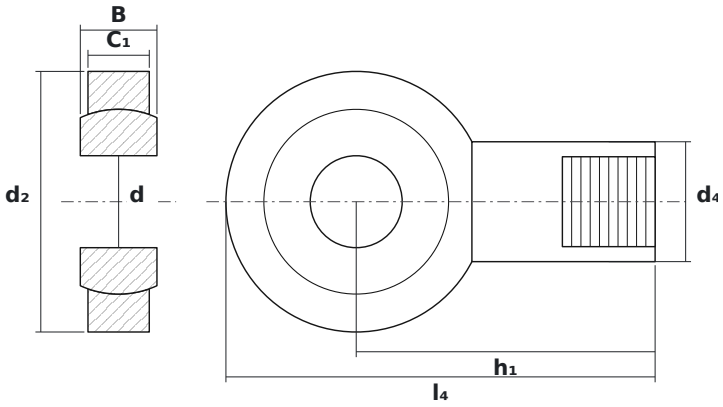

DIMENSIONS

d	bore diameter	**12 mm**
d2	rod end head diameter	**34 mm**
B	ball (inner ring) width	**10 mm**

SPECIFICATIONS

Manufacturer	**INNE**
Manufacturer designation	**DGK12 DO**
Rolling elements	**plain bearing (no rolling elements)**
Mass	**0.066 kg**