Rod end DGK60 DO INNE

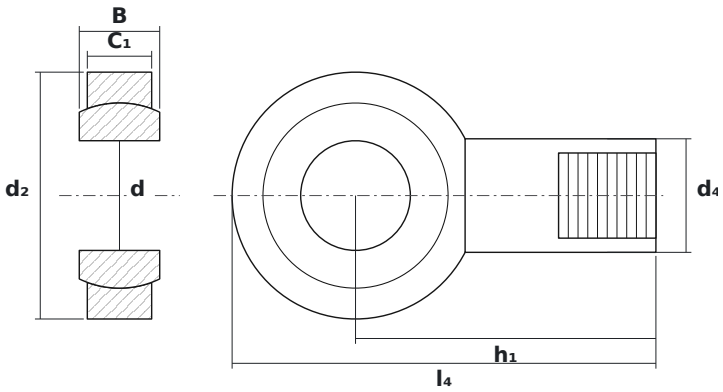

DIMENSIONS

d	bore diameter	**60 mm**
d2	rod end head diameter	**135 mm**
B	ball (inner ring) width	**44 mm**

SPECIFICATIONS

Manufacturer	**INNE**
Manufacturer designation	**DGK60 DO**
Rolling elements	**plain bearing (no rolling elements)**
Mass	**3.9 kg**